International Journal of Electronics Communication and Computer Engineering
Volume 3, Issue 4, ISSN (Online) 2249 –071X, ISSN (Print): 2278 – 4209

GSM Based Power Meter Reading and Control System

Mr. Rahul Ganesh Sarangle
Post Graduate Student
(M.E. EXTC)
Vidyalankar college of Engineering
rahuls2304@gmail.com

Prof. Dr. Uday Pandit Khot
Associate Professor and HOD
EXTC Dept of Thadomal Sahani
College of Engineering,
Bandra

Prof. Jayen Modi
Assistant Professor (EXTC Deptt.)
Vidyalankar College of
Engineering, Wadala
jayen.modi@vit.edu.in

***Abstract* — The present system of energy billing is error prone and also time and labor consuming. Errors get introduced at every stage of energy billing like errors with electro-mechanical meters, human errors while noting down the meter reading, and errors while processing the paid bills and the due bills. The home appliances which consume more power causes an increase in the payment of excessive bills. The remedy for all these problems GPMC(GSM based power meter and control system) is developed which consist of the integration of a single phase Class 1, IEC61036 , standard compliance digital kWh power meter. It will keep track of the meter reading of each day and the reading with the user identification number send it to the user as well as to the electricity department and Electricity eBilling system associated with electricity department will keep the track of each SMS meter reading and the appropriate bill get generated at the last day of the month and the bill is forwarded to user from the server. So there is no chances of confusion to the user for paying the bill. The GPMC also feature distribution control system which controls the power of the appliances remotely.**

***Keywords* — GSM, Control, Power.**

I. INTRODUCTION

Since the first Global System for Mobile Communications (GSM) network started to commission and operation in 1991, the world has adopted the standard for mobile communication. After the adoption, countries around the world are developing GSM infrastructure for wider nation wide coverage at a rapid rate. The SMS was developed as part of the Global System for Mobile Communication (GSM) phase2 specification in 1992 as a text paging mechanism in addition to the original GSM voice service. It experienced an astronomical increase usage making it as a popular communication means for notification.

The SMS has extended their service to content providers to deliver a wide variety of services to mobile phone users. SMS is one of the convenient mean of communication especially for reminder, notification, and a short note when the mobile phone user is not expect to answer or respond immediately. With the advancement and booming of ICT and internet technology makes online information system applications such as e-commerce are gaining more acceptances by the public. The convergence of GSM and ICT network allow more mobile and wireless applications to be implemented such as electricity meter reading, billing, payment and distribution control. Now a days Current electricity billing is done by labor and manual reading from houses to houses shown on Table 1.1. This requires huge number of labor operators and long working hour to achieve complete area billing.

Table 1.1 : Analysis of cost in different aspects

Meter reading: Cost drivers	
Cost heading	Sub cost headings
Manpower cost	1.Salaries 2. Risk and insurances
Transportation cost	1. Cost of ownership (Vehicle) 2. variable cost (Fuel)

operator billing are prone to reading error as sometime the houses power meter is place in a location which is hard to read with naked eyes. Labor billing job is sometime restricted and slow down by bad weather condition. The printed billing has the tendency of missing in the mail box. Various GSM based power meter reading and control system (GPMC) systems using Power Line Carrier (PLC) communications , Bluetooth and ZigBee were developed to address the above mention problems, but the above mentioned AMR are either short in operating distant and still require some intervention of human operators or prone to error and reliability issue due to noise and poor power quality in the transmission line, more importantly the above mentioned method does not allow control. With the rapid development of Global System Mobile (GSM) infrastructure and Information Communication Technology (ICT) in the past two decades has made wireless automatic meter reading system more reliable and possible. The GSM Power Meter Reading and Control (GPMC) System takes advantage of the available GSM infrastructure nationwide coverage in the country and the Short Messaging System (SMS) cell broadcasting feature to request and retrieve individual houses and building power consumption meter reading back to the energy provider wirelessly and the control system will monitor the power of the appliances which consumes more power than its predefined limit. If the power increases to the predefined limit the control system will control the power by means of different techniques for different types of loads like resistive and inductive load so as to reduce un necessary power consumption of appliances and to save the energy. The followings are the objectives of the research project to ensure it meets the aim.

- To design a circuit which continuously monitors the meter reading and sends the message to User and electricity department.
- To design a mechanism that will monitors and controls the power of appliances.

II. LITERATURE REVIEW

According to [1], Automatic Meter Reading (AMR) technology, electrical utilities (EUs) have been exploiting

their own infrastructure to bill their customers in an efficient and economical way. Since the amount of data that has to be send is quite low related to the available time to perform this task, AMR applications have been demanding low bit rates. At this moment, EUs are exploring and demanding other services as load and alarm management, remote monitoring and disconnections, etc. In this context, the Low Voltage modems should provide more throughout while keeping the cost of the hardware low.

The results of this low complexity AMR technology are that in order to deploy an AMR network, the cost of the equipment on the customer premises and the added value services that the system provides are two key factors in its business case.

According to [2],it describes the different methods by which distribution transformer loads can be allocated for power-flow studies. Individual distribution loads are calculated using four different methods of allocation. The results of the power-flow studies are compared to those determined using the actual customer meter readings.

• Daily kWH
• Monthly kWH
• Transformer kVA
• REA

The purpose of enhancing the management level of the meter reading of power enterprises, web services based GPRS automatic meter reading system is put forward the characteristics of GPRS technology and Web Services technology are analyzed, and the architecture of web services based GPRS automatic meter reading system.

According to [3],The characteristics of GPRS technology and Web Services technology, described and it introduced how to build the Web Services based GPRS Automatic Meter Reading System with these technologies. This system has such merits as: real time, wide coverage, open and easy to maintenance and extension. At present, this GPRS Automatic Meter Reading System has gained good application in practical work and been proved to be correct.

In [4], a microprocessor-based automatic meter reading system is implemented, which provides a cost-effective, reliable, and interference free data transfer between remote meter reading units and the utility control centre. The meter reading and management processes are free from human involvement. Based on the existing telephone networks, it is very flexible for the utility companies to access, service and maintain this meter reading system. A user friendly and window based user interface is designed which fully utilizes the personal computer's terminate and stay resident programming technique to achieve communications between the remote meter reading units and the personal computers in the utility control center. This paper describes the hardware design of the remote reading unit and the software implementation of the communication module and user interface.

In [5], we propose a novel Automatic Meter Reading (AMR) system using the IEEE 802.15.4-compliant wireless networks. The mesh network based automatic utility data collection system (AUDCS) provides a cost-efficient solution by exploring the self organization, self-healing capabilities of the mesh networks and utilizing the state-of-art semiconductor chips and the radio transceivers compliant with IEEE 802.15.4 standard. An IEEE 802.15.4 network may operate in either the star topology or the peer-to-peer topology. The peer-to-peer mode is chosen for the AUDCS system, as it is more flexible and robust than the centralized implementation based on the star topology. In the AUDCS system, each node has the capability of two-way communications and may relay or forward the data for the neighboring nodes within the transmit range, hence eliminating the need of installing dedicated communication nodes to collect data. In addition, mesh networking provides the self-healing function by automatically re-routing via other neighboring nodes. The application data characteristics are exploited in the data gathering and dissemination to achieve better energy efficiency.

According to [6], it is possible for Chinese automatic meter reading system(AMRS) to be equipped with wireless sensor networks due to their low-cost, simplicity and mobility. In the current study, we compared the advantages of ZigBee with other two similar wireless networking protocols, Wi-Fi and Bluetooth, and proposed a wireless solution for AMRS based on ZigBee technology. As an explorative application of ZigBee technology in AMRS, The design reduces the system cost and power consumption and improves the system's flexibility and practicality.

A questionnaire-based household survey was conducted in order to understand the dynamics of energy use in households. About 10 household consumers were interviewed in Mumbai, a metropolitan city in the state of Maharashtra (India). Income is one of the major determinants of energy use in households. Hence, the households were segmented according to their monthly income and a total of six income categories were formed as given below:

Income Category (IC) 1: monthly income upto Indian Rs.5000, IC2: Rs.5000 to Rs.10,000, IC3: Rs.10,001 to Rs.15,000, IC4: Rs.15,001 to Rs.20,000, IC5: Rs.20,001 to Rs.25,000, and IC6: above Rs.25,000 About fifty households were surveyed from each income category.

These included the list of end-use technologies (energy carriers and appliances), the extent of use and pattern of use of end-use technologies and the criteria consumers use to choose a particular technology for a particular end-use. The electricity consumption data for the period March 2011 to January 2012 (i.e. for one year) was also obtained.

A list of technology choices available to the consumers for various end-uses considered for the study is given in Table 2.1.

Pertaining to the end-use technologies used were collected through the questionnaire. Further, information regarding the mode of purchase of end-use equipments and the awareness of the consumers about renewable energy alternatives were also gathered. Information regarding the number of households surveyed, their mean electricity consumption.

Lighting is a major source of electricity consumption. Commercial public sector buildings and residential houses account for 43% of the electricity used for lighting. There are common problems that home owners encountered in relation with lighting system. One of this is due to some negligence like leaving the lights ON results of having greater power

International Journal of Electronics Communication and Computer Engineering
Volume 3, Issue 4, ISSN (Online) 2249 –071X, ISSN (Print): 2278 – 4209

consumption. This additional power consumption that wasted varies directly to our electrical bills. Another problem is for those busy home owners who will arrive home late at night; they want to have immediate access to turn on the lights to have preventive measures against robbery and crimes. Residential houses and offices about 20 to 50 percent of total energy is consumed due to lighting load. Most importantly, for some buildings over 90 percent of lighting energy consumed can be an unnecessary expense through over-illumination. The cost of that lighting can be substantial. A single 100 W light bulb used just 6 hours a day can cost over $25 per year to use (.12/kWh). Thus lighting represents a critical component of energy use today, especially in large office buildings where there are many alternatives for energy utilization in lighting.

Table 2.1: List of technology choices available for different uses

End-Use	End-use technologies available
Cooking	Firewood, Animal wastes, Kerosene Stove, LPG Stove, Electric Cooking Range, Solar cooker
Water Heating	Firewood, Animal wastes, LPG Stove, Geyser, Immersion Heater, Solar water heater
Room Comfort	Fan, Air Cooler, Air Conditioner
Water Pumping	Manual Pump, Motor pump, Solar pump
Lighting	Incandescent bulbs, Tube lights, Compact Fluorescent lamps

Comparisons of the latest technologies which were used to take a meter reading is shown in table 2.2 and 2.3.

Table 2.2 Comparison with Existing system

	References		
	1	2	3
Communication Hardware	PLC modems	GPRS	GPRS, Web service
Features	Alarm managem ent, Disconnec tion	Daily Kwh, Monthly kwh, Transformer KVA	Real time, wide coverage
Cost	Low	Costly	Costly

Table 2.3 Comparison with Existing system

	References		
	4	5	Project
Communication Hardware	PSTN network	IEEE 802.15 Router	GSM modem, Server, web service
Features	Cost effective, reliable. Free data transfer	Flexible, robust	Cost effective, reliable, robust, Power control, Real time
Cost	Less costly	Costly	Moderate

III. Block Schematics

3.1 Block schematic for "GSM based power meter reading"

The figure 3.1 shows the block schematic for the meter side for the measurement of meter reading from the remote location. The message which is send by the server side for the request of the reading which is firstly received by the GSM modem, then microcontroller(Master) first read the message from the sim card, then Master controller will communicate with the slave microcontroller which is continuously taking the reading from the meter via serial peripheral interface, the slave who setup the communication with master and slave will send the current reading which is store in the Stack of the slave will send it to the Master microcontroller.

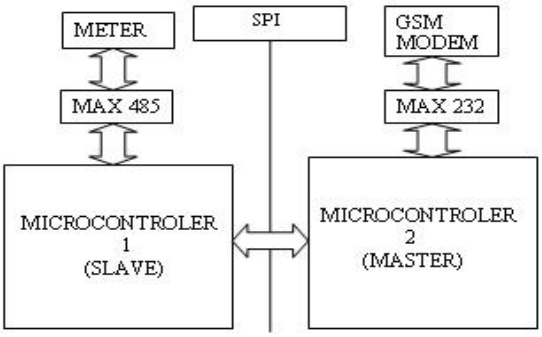

Fig.3.1 : Block Schematic for GSM based power meter reading(Meter side)

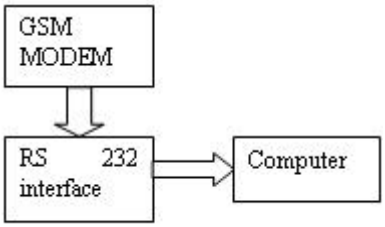

Fig.3.2 : Block Schematic for GSM based power meter reading (Server side)

International Journal of Electronics Communication and Computer Engineering
Volume 3, Issue 4, ISSN (Online) 2249 –071X, ISSN (Print): 2278 – 4209

The message which is replied on the request of the server which is receive by the server's modem , then the modem will forward the message to the database for the data collection system the whole system for the server side is shown in figure 3.2

3.2 Block Schematic for "GSM based control system"

The message send from the server side or from user to control the power of the appliances which is receive by the GSM modem shown in fig 3.3, the microcontroller reads the message of the sim and it according to the data of the

message like how much power need to control, is given to Zero crossing detector, zero crossing detector generates delay for the particular which decides for how much time Triac is on or off, accordingly the internal PWM will drive the loads with the help of phase reference of AC cycle.

The fig 3.3 shows the GSM based control system.

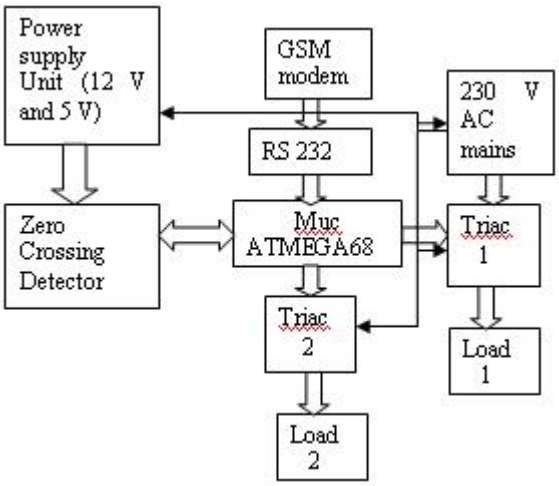

Fig.3.3 : Block Schematic for Control System

IV. Hardware Implementation

A large part of the project involved choosing the appropriate hardware components to take the meter reading from the meter and send it to user and to server remotely and to control the power consumption and provide a wireless link. The initial idea was to search for an all-in-one solution that would have all the components integrated, allowing for the smallest size possible. Initially it was thought that a simple circuit could be built and attached to a microprocessor to control the power. But the cost of the circuit with microprocessor is very high. It was decided that designing a simple circuit, with the help of the microcontroller and would provide accurate power controlling and the measurement of meter reading. The following sections describe the research process as well as the implementation of these integrated circuits. Hardware implementation was done in Eagle 6.0 which is having the facility of PCB layout print.

V. Software Implementation

According to the hardware circuit design features, meter reading terminal program flowchart was introduced as shown in figure 5.1. First the system initializes each module, and then reads the meter reading regularly and stores them. When the receiving the command, meter send the current status along with the energy consumption.

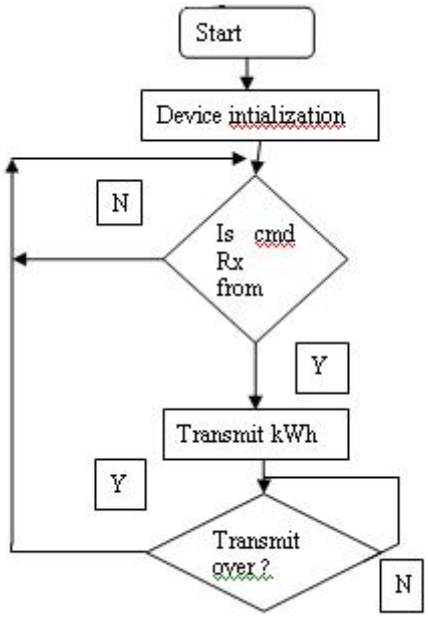

Fig.5.1 : Meter side program flow

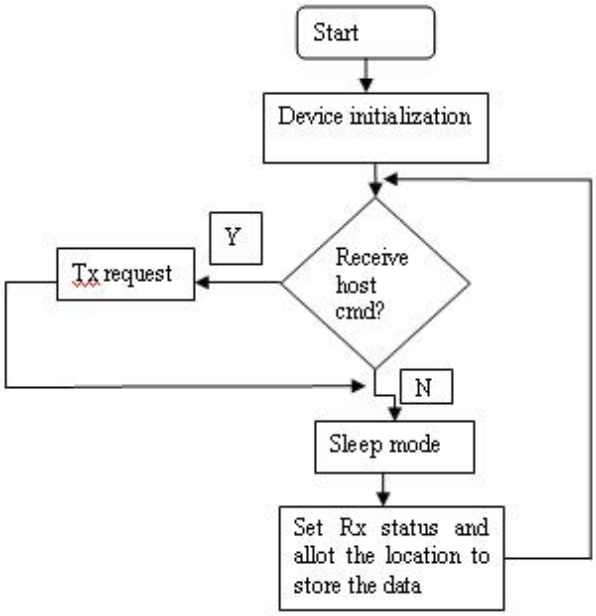

Fig.5.2 : Server side program flow

According to the hardware circuit design features, server side terminal program flowchart was introduced as shown in figure 5.2. First the system initializes each module, and then the server which send the reading request to the meter through GSM modem. When the server receives the reading, it will store the data in the database and sends the consumption to the user via sms.

International Journal of Electronics Communication and Computer Engineering
Volume 3, Issue 4, ISSN (Online) 2249 –071X, ISSN (Print): 2278 – 4209

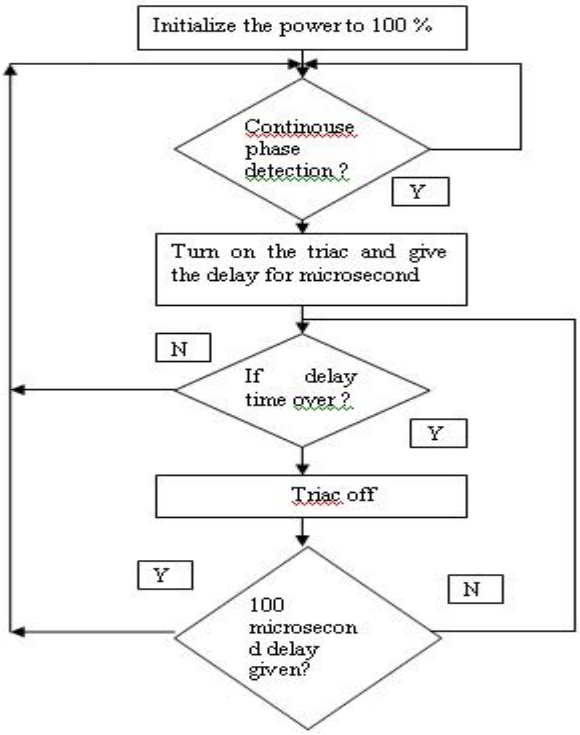

Fig.5.3 : Power control system program flow

The power control system program flow is shown in fig 5.3. The this control system, the power of appliance get set to 100%, then the routine written in bootloader in such a way that it will detect the phase of each and every pulse of AC cycle and according to that the delay is given to microcontroller to turn on the triac. As per the calculated delay if the time is over then the triac get off and Muc will see the other phase detection to control the power remotely.

VI. RESULTS

The project is having the facility of getting the meter reading at any time by the customer request. The fig.6.1 show the message which is send by the customer to the energy meter.

Fig.6.1 : SMS send to meter side from customer

After sending the message by the customer, the customer will receive the message of meter reading from the meter side which is shown in fig 6.2.

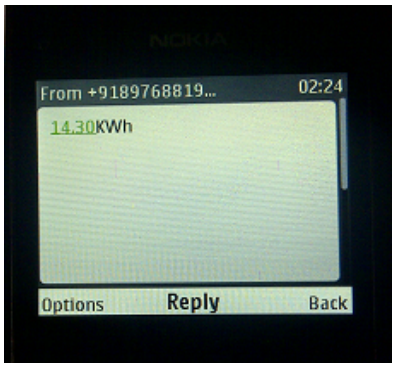

Fig.6.2: SMS received by customer from meter

The project is having the facility of sending the current meter reading of the customer of each day to the customer from the server side which maintains the database for meter reading. The SMS is shown in fig 6.3.

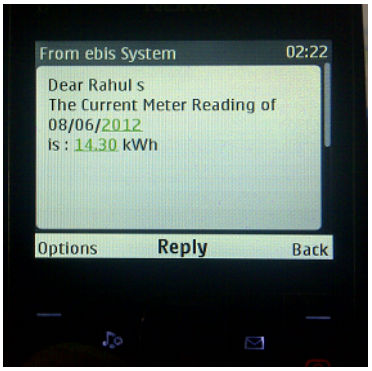

Fig.6.3: SMS received by customer from server

The server will send the e-mail of calculated bill of each and every month to the customer at the end of the bill month is shown in fig 6.4.

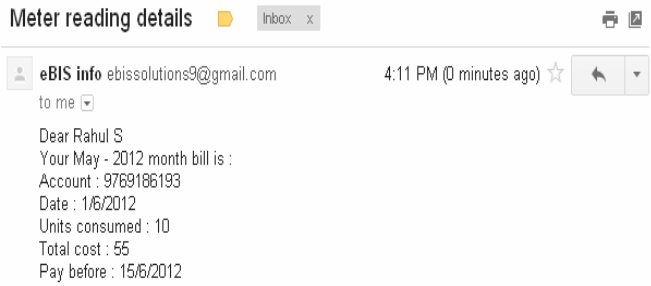

Fig.6.4 : Email received by customer from server

The monthly calculated bill details SMS get send to the customer is shown in fig 6.5

International Journal of Electronics Communication and Computer Engineering
Volume 3, Issue 4, ISSN (Online) 2249 –071X, ISSN (Print): 2278 – 4209

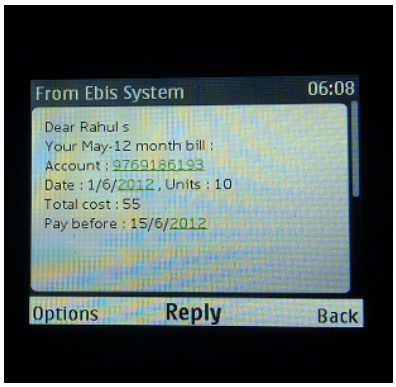

Fig.6.5 : The monthly bill SMS received by customer from server

The GUI of electronic billing information system which is developed in visual studio 2005 with database establishment in SQL server 2005 is shown on fig 6.6.

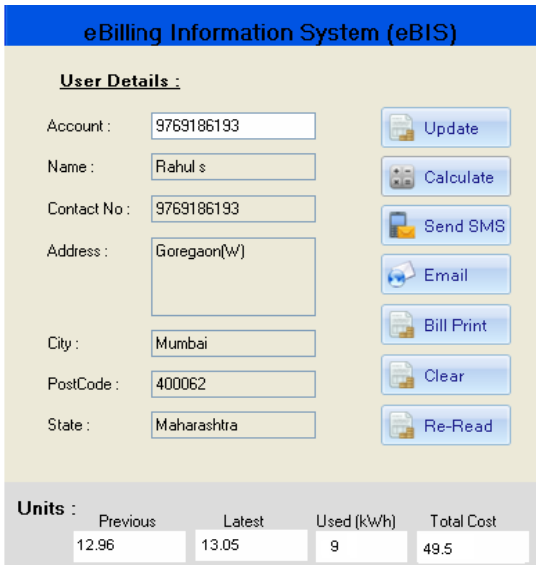

Fig.6.6 : GUI for the eBIS system

The SMS which is send from the customer cell phone to control the system remotely as *050 090# as 050 shows the 50 % power of 1st device need to be control and 090 shows the 90 % power of 2nd device need to be control ,Like if device 1 is 100 W bulb then the power of 50 W get control and if the device 2 is 60 W bulb then power of 54 W get control the SMS is shown in fig 6.7

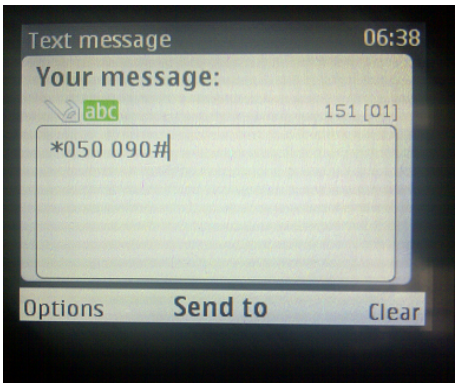

Fig.6.7 : SMS to control system

The table 6.1 shows the analysis after sending the message for controlling the power of device. The experiment was done for 2 hours.

Table 6.1 : Analysis and result of GSM based control system

Load	Watt	Power need to control	Measured power
Bulb	100 W	50 W	50.2 W
Bulb	60 W	54 W	54.3 W

VII. Conclusion

Today utility owners are using energy based tariffs when distributing electricity. If implementing a load-demand based tariff the possibilities to control the consumption pattern increase because the economical revenues become more connected to the peak loads within the system. The new demand-based tariffs meet the Swedish regulations as long as the total yearly revenue does not exceed the fixed limit. However, the monthly revenues are varying depending on which tariff is being modelled. The demand based tariffs move the revenues to the high-peak period, November - March, and the utility operator gets a good matching between system peaks and revenues. Further investigations needs to be done in order to determine the adequate pricing level from the utility operators' as well as the customers' points of view.

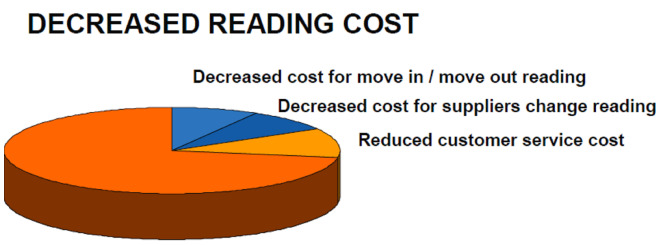

Fig.7.1 : AMR Business Case

Automatic meter reading systems contribute to an increased knowledge of different consumption patterns on an individual basis shown in fig 7.1. Combining individual

electricity consumption series with large-scale data handling methods could provide powerful tools for evaluation, forecasting and simulation of electricity consumption. A bottom-up approach is not a precise model for electricity consumption on an individual level. A model with good performance on an aggregated level, using a bottom-up approach, could increase the understanding of the different parts of electricity metering series. The control system of this project is a cost effective with the controlling more than 4 appliances simultaneously as this system is very beneficial for the home appliances power control so as to reduce unnecessary power consumption.

REFERENCES

[1] R. Aquilue, M. Deumal, J.L. Pijoan, L. Corbeira," A Low Complexity Multicarrier Proposal for Medium Rate Demanding Automatic Meter Reading Systems, IEEE International Symposium June 2007.

[2] W.H. Kersting, W.H. Phillips," "Load Allocation Based upon Automatic Meter Readings", In proceeding of: Transmission and Distribution Conference and Exposition, 2008. T&D. IEEE/PES

[3] Wu Kehe Zhang Xiaoliang;Wang Yuanhong ;Xu Yuhan_, "Design and implementation of web services based GPRS automatic meter reading system", 3rd international conference Aug 2010.

[4] Shi-Wei Lee, "Design of an automatic meter reading system [electricity metering], IEEE IECON 22nd International conference, Aug 1996.

[5] Jin Zhu and Recayi Pecen. "A Novel Automatic Utility Data Collection System using IEEE 802.15.4-Compliant Wireless Mesh Networks", IAJC-IJME International Conference 2008.

[6] H.G. Rodney Tan, C. H. Lee, and V. H. Mok, Hybrid System Automatic Meter Reading*The 8th International Power Engineering Conference (IPEC2007)*. Web.30 November2010.

[7] Ll Li, Xiaoguang Hu, Jian Huang (2008), Research on the Architecture of AMR Reading in Next Generation Network, The IEEE International Conference on Industrial Informatics.

[8] T. Chandler, "The technology development of automatic metering and monitoring systems," in IEEE International Power Eng. Conf., Dec. 2005.

[9] M. Choi, S. Ju, and Y. Lim, "Design of integrated meter reading system based on power line communication," in IEEE International Symp. Power Line Commun. Its Appl., Apr. 2008.

[10] A. Abdollahi, M. Dehghani, and N. Zamanzadeh, "SMS-based reconfigurable automatic meter reading system," in IEEE International Conf. Control Appl., Oct. 2007.

[11] Y. K. Peng, et al., "A novel PWM technique in digital control," IEEE Transactions on Industrial Electronics, Vol. 54, February 2007.

[12] Amin S. Mehmood, T. Choudhry, M.A. Hanif, A "Reviewing the Technical Issues for the Effective Construction of Automatic Meter Reading System" in International Conference on Microelectronics, 2005 IEEE.

[13] Bharath, P.; Ananth, N.; Vijetha, S.; Prakash, K.V.J.; "Wireless Automated Digital Energy Meter" in Sustainable Energy Technologies, ICSET 2008.

[14] Chih-Hung Wu; Shun-Chien Chang; Yu-Wei Huang; "Design of a wireless ARM-based automatic meter reading and control system" in Power Engineering Society General Meeting, 2004. IEEE.

[15] Liting Cao, Jingwen Tian and Dahang Zhang, "Networked Remote Meter-Reading System Based on Wireless Communication Technology" in International Conference on Information Acquisition, 2006 IEEE.

[16] Liting Cao, Wei Jiang, Zhaoli Zhang "Automatic Meter Reading System Based on Wireless Mesh Networks and SOPC Technology" in International Conference on Intelligent Networks and Intelligent Systems, 2009 IEEE.

[17] P. Zerfos, X. Meng, S. Wong, V. Samanta, and S. Lu, "A study of the short message service of a nationwide cellular network," in ACM SIGCOMM Internet Measurement Conf., Oct. 2006.

AUTHOR'S PROFILE

Mr. Rahul Sarangle

who completed bachelor of engineering in Electronics and Telecommunication and Currently pursuing Master of engineering in Electronics and Telecommunication from Vidyalankar Institute of Engineering from Wadala.

Dr. Uday Pandit Khot

who is currently working in Thadomal Sahani College of engineering as Head of Department and Associate professor from past 16 years. He completed his Ph.D. from IIT Bombay in 2010.

Prof. Jayen Modi

who is currently working as currently working in Vidyalankar College of Engineering, Wadala as Assistant Professor. He completed his masters in Electronics in 2010. Currently doing Ph.D.